ASRTU SPECIFICATION FOR SOLID ALUMINIUM ALLOY RIVETS

0.0 SPECIFICATION NO. : AS:280:80:MAY:2013

1.0 SCOPE :

1.1 This specification prescribes the requirement and methods for testing of Solid Aluminium Alloy Rivets.

1.2 This is a purchase specification and does not include manufacturing details. The parts/material supplied against this specification shall be compatible with the original equipment.

1.3 The supplier shall provide detail drawings and specifications to the purchasing/ inspecting authority whenever such information is specifically called for.

1.4 The material offered against this specification shall conform to this specification in full. The tests shall be carried out on the part directly or on the specimen prepared from the components'. If any of the samples fail in any one or more tests specified, the sample shall be considered as not having met the requirements of this specification.

1.5 It is the manufacturer's prime responsibility to satisfy the inspection authority that the commodity conforms to this standard. This may be accomplished by performing the tests specified in this standard.

1.6 Sample selection shall be the responsibility of the Quality Assurance Officer. Required quality for complete testing as per this specification shall be supplied.

1.7 This Specification supersedes earlier Specification including AS:280:66:JAN:04.

2.0 APPLICATION & REFERENCE :

2.1 This specification covers the requirements of 3mm, 5mm, 6mm, 8mm rivets having length of 6mm to 30mm for joining skeleton members and Aluminium Panels to Skeleton of a bus body for road Vehicle building and application data as given at Table 6.

3.0 REFERENCE STANDARDS :

3.1 The following standards are necessary adjuncts to this Standard.

IS:740-1977	Specification for Wrought Aluminium and Aluminium Alloy Rivet Stock for General Engineering Purposes.
IS:2907-1964	Specification for Non-Ferrous Rivets.
IS:10102-1982	Technical Supply Condition for Rivets
BS-641-1951	Dimension of Small Rivets for General Purposes

3.2 Definitions :

3.2.1 A Rivet is a mechanical fastener, which has a self contained mechanical or other feature which permits joining of Panels to Skeleton or Skeleton to Skeleton by Cold Forming with a mechanical hammer or Pneumatic hammer for forming the head during rivet setting.

3.2.2 **Styles** :
Generally four basic types of Aluminium Rivets are used in bus body building as shown in Fig. No.1.

a) Snap Head (Round Head) Rivets
b) Counter Sunk (120° angle) Rivets
c) Flat Head Rivet
d) Mushroom Head Rivet

4.0 TEST QUANTITY :

Minimum 25 Nos. of Rivets shall be supplied duly packed in polyurethane bag with signature of authority and additional 25 Nos. for retesting if required.

5.0 MATERIAL :

The material shall be Aluminium Alloy Designation 65032 (HR-20), 64430 (HR-30) or equivalent Aluminium Alloy material having chemical composition as given in Table No. 1.

TABLE – 1

	65032 (HR-20)	64430 (HR-30)
Copper	0.15 - 0.4	0.1 Max.
Magnesium	0.7 - 1.2	0.4 - 1.2
Silicon	0.4 - 0.8	0.6 - 1.3
Manganese	0.2 – 0.8	0.4 – 1.0
Iron	0.6 Max.	0.6 Max.
Aluminium	Remainder	Remainder
Hardness	40 - 65 BHN	40 - 65 BHN
Shear Stress	9.2 Kg/mm^2 (minimum)	9.2 Kg/mm^2 (minimum)

6.0 FINISH :

The Rivets produced by the above material shall be free from surface cracks, surface pits, scars & burrs etc.

7.0 DIMENSIONS :

The dimension of the Rivets shall be as specified in Table 2, 3, 4 and 5 or as specified by the purchaser.

TABLE -2
Snap Head (Round Head) Rivets, Fig.No.1

	3mm ± 0.1	5mm ± 0.15	6 mm ± 0.15	8mm ± 0.15
Shank diameter, ds	2.9 - 3.1	4.85 - 5.15	5.85 - 6.15	7.85 - 8.15
r max.	0.3	0.3	0.3	0.4
Head diameter, D	5 - 5.5	8.5 - 9.0	10.2 - 10.8	13.7 - 14.3
Height of Head, H	1.70 - 1.9	2.9 - 3.1	3.5 - 3.7	4.7 - 4.9
Eccentricity of Head	0.2	0.3	0.3	0.4
Recommended hole diameter	3.1 - 3.2	5.10 - 5.2	6.10 - 6.3	8.10 - 8.3
Length, L	L $^{+0.5}_{-0.0}$			

TABLE -3
Counter Sunk (120 ° angle) Rivets Fig No. 1

	3mm ± 0.1	5mm ± 0.15	6 mm ± 0.15	8mm ± 0.15
Shank diameter, ds	2.9 - 3.1	4.85 - 5.15	5.85 - 6.15	7.85 - 8.15
Head diameter, D	5.8 - 6.2	9.7 - 10.3	11.7 - 12.3	15.7 - 16.3
Height of Head, H	0.84 - 0.9	1.4 - 1.5	1.5 - 1.78	2.3 - 2.4
Eccentricity of Head	0.2	0.3	0.3	0.4
Recommended hole diameter	3.10 - 3.2	5.10 - 5.2	6.10 - 6.3	8.10 - 8.3
Length, L	L $^{+0.5}_{-0.0}$			

TABLE - 4
Flat Head Rivets, Fig No. 1

	3mm ± 0.1	5mm ± 0.15	6 mm ± 0.15
Shank diameter, ds	2.9 - 3.1	4.85 - 5.15	5.85 - 6.15
Head diameter, D	5.8 - 6.2	9.7 - 10.3	11.7 - 12.3
Height of Head, H	0.6 - 0.87	1.1 - 1.4	1.35 - 1.65
Eccentricity of Head	0.2	0.3	0.3
Recommended hole diameter	3.10 - 3.2	5.10 - 5.2	6.10 - 6.3
Length, L	+ 0.5 L - 0.0		

TABLE - 5
Mushroom Head Rivets, Fig No. 1

	3mm ± 0.1	5mm ± 0.15	6 mm ± 0.15	8mm ± 0.15
Shank diameter, ds	2.9 - 3.1	4.85 - 5.15	5.85 - 6.15	7.85 - 8.15
r max.	0.30	0.30	0.30	0.30
Head diameter, D	6.5 - 6.9	10.9 - 11.5	13.0 - 13.8	17.6 - 18.3
Height of Head, H	1.70 - 1.90	2.90 - 3.10	3.50 - 3.70	4.70 - 5.00
Eccentricity of Head	0.2	0.3	0.3	0.4
Recommended hole diameter	3.10 - 3.20	5.10 - 5.20	6.10 - 6.30	8.10 - 8.30
Length, L	+ 0.5 L - 0.0			

8.0 MECHANICAL & PERFORMANCE REQUIREMENT :

8.1 **Flattening Test Fig No.2**
A specimen of a length equal to the full diameter of stock shall be cut from the shank of the rivet. It shall be cold flattened in an axial direction until the diameter is equal to twice the original diameter. It shall not crack as a result of this test. If the rivets are submitted to any form of heat treatment after manufacturing the flattening test shall be performed after such treatment.

8.2 **Head Soundness Test :**
The Head Soundness Test shall be conducted as prescribed in IS 1012-1982. The rivet shall be placed as shown in the figure No. 4. When struck several blows with a hammer, the head of the rivet should bend through an angle of 30° (90° - 60°) without exhibiting any sign of cracking at the fillet between the head and the shank. The hardness of the block shall be 50±2 HRC.

8.3 **Hardness**
When tested on Brinell hardness tester the hardness on rivet forming portion shall be in the range as specified in Table No. 1.

8.4 **Shear Test**
The Shear test shall be conduced as prescribed in IS 10102-1982. The test fixtures shall be as depicted in Fig.3. The Rivet shall satisfy a minimum shear strength as specified in Table No.1.

TABLE - 6
Stack Thickness for Recommended Lengths

	Diameter of Rivets			
	3mm	5mm	6 mm	8mm
RECOMMENDED LENGTH	STACK THICKNESS (MINIMUM - MAXIMUM)			
6 mm	2.25 - 3.75	-		
7 mm	3.25 - 4.75	-		
8 mm	4.25 - 5.75	-		
9 mm	5.25 - 5.75	-		
10 mm	6.25 - 7.75	3.75 - 6.25	-	
12 mm	8.25 - 9.75	5.75 - 8.25	4.50 - 7.50	-
14 mm	10.25 - 11.75	7.75 - 10.25	6.50 - 9.50	4.00 - 8.00
16 mm	12.25 - 13.75	9.75 - 12.25	8.50 - 11.50	6.00 - 10.00
18 mm	14.25 - 15.75	11.75 - 14.25	10.50 - 13.50	8.00 - 12.00
20 mm	16.25 - 17.75	13.75 -16.25	12.50 - 15.50	10.00 - 14.00
22 mm	18.25 - 19.75	15.75 - 18.25	14.50 - 17.50	12.00 - 16.00
24 mm	20.25 - 21.75	17.75 - 20.25	16.50 - 19.50	14.00 - 18.00
26 mm	22.25 - 23.75	19.75 - 22.25	18.50 - 21.50	16.00 - 20.00
28 mm	24.25 - 25.75	21.75 - 24.25	20.50 - 23.50	18.00 - 22.00
30 mm	26.25 - 27.75	23.75 - 26.25	22.50 - 25.50	20.00 - 24.00

WEIGHTAGE MARKS FOR SOLID ALUMINIUM ALLOY RIVETS
AS:280:80:MAY:2013

Sr.No.	Test Parameters	Cl.No	Marks Allotted	P/T
1	Dimension & Finish	7.0		
a)	**Dimensions**			
i)	Shank Diameter		4	T
ii)	Head Diameter		4	T
iii)	Height of Head		3	T
iv)	Length		3	T
v)	Eccentricity of Head		3	T
b)	**Finish**	6.0	3	T
2	Material	5.0	20	T
3	Mechanical & Performance Test	8.0		
i)	Flattening Test	8.1	15	P
ii)	Head Soundness Test	8.2	15	P
iii)	Hardness	8.3	15	P
iv)	Shear Test	8.4	15	P
			100	

P = Proportionate marks shall be considered
T = Total marks shall be considered

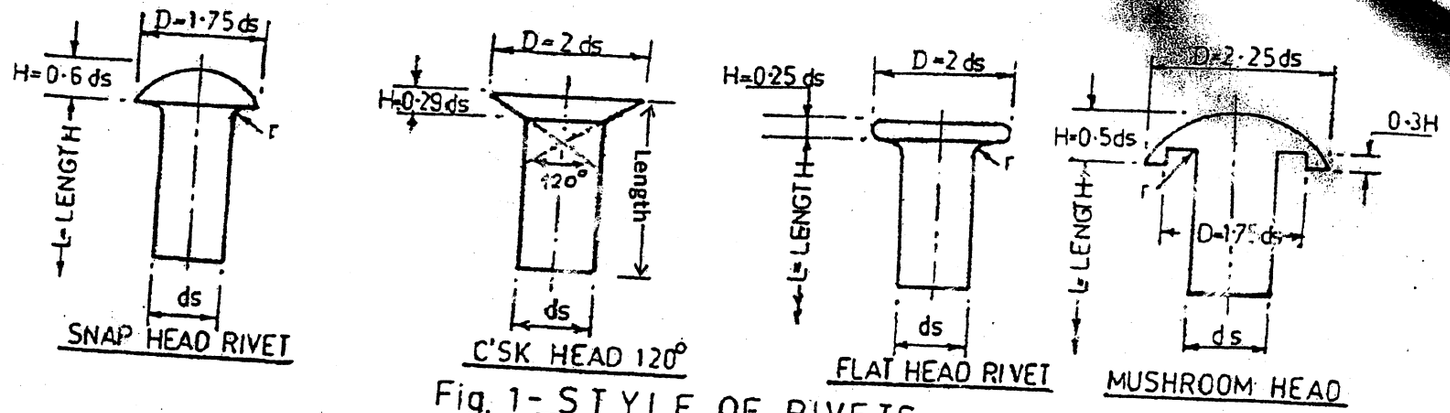

Fig. 1 - STYLE OF RIVETS

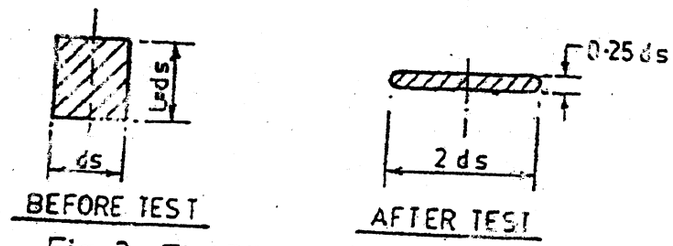

Fig. 2 - FLATTENING TEST

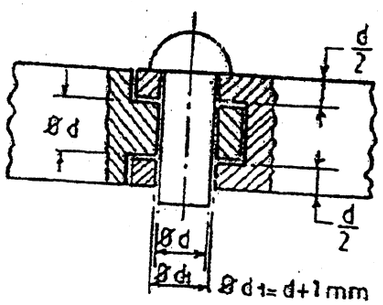

Fig. 3 - DOUBLE SHEAR TEST SET UP

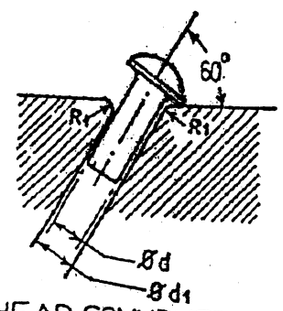

Fig. 4 - HEAD SOUNDNESS TEST

SOLID ALUMINIUM RIVETS

C I R T (T & R) PUNE - 26			
DRN.	CHKD	APPD.	DRG. NO.
[illegible] 18/9/99			S-002A

AS: 280